ASSEMBLY AND TEST INSTRUCTION

SERIES:	**ALL WATTS WATER TECHNOLOGIES DOMESTIC MASTER CARTONS**	**ATI No.**	**M.75.A1**	**REV.: 10**
SIZE(S):	N/A	EDP NO.	5003384	**PAGE: 1 OF 7**
MODELS:	N/A	SUPERSEDES:	REV. 6 OF 06-10-2004	

REV.	ALTERATIONS	ALERT	DATE	BY	ENG.	Q/A
7	ADD REFERENCE TO ATI M.75.A4	04W 14931	07-14-2004	GEB	JPJ	DJO
8	ADD NEW FIRST NOTE; INC. LABEL GUIDE FROM 2.75 x 4.25	10W17218	06-15-2010	MJW	JPJ	MPS
9	UPDATE WATTS LOGO ON ATI TEMPLATE-NO OTHER CHANGES	11W17627	07-15-2011	MJW	JPJ	MPS
10	UPDATE WATTS LOGO TO WATTS WATER TECH. LOGO ON ATI, ADD "WATER TECHNOLOGIES" AFTER "WATTS" IN BODY OF ATI, UPDATE 4TH LINE UNDER NOTES TO REMOVE REFER TO ATI AND ADD CONTACT WATTS WATER TECHNOLOGIES MARKETING. UPDATE 7TH LINE FROM WATTS TO WATTS WATER TECHNOLOGIES MARKETING COMMUNICATIONS GROUP.	11W17657	08-09-11	MJW	JPJ	MPS

MASTER CARTON LOGO ARTWORK, DOMESTIC SUPPLIERS

NOTES:

- **IMPORTANT: Do not recreate the Watts Water Technologies Logo. Contact Watts Water Technologies MARCOM Dept. for actual artwork files to be used.** ⑧ ⑩

- This is the "Tony Arthur Blue Ribbon Logo" (designed by Rand-Whitney) to be used on all new and existing Watts Water Technologies master cartons. ⑩
- For import (off shore) supplier master carton logo artwork refer to ATI M.75.A3 (EDP# 5003397).
- For carton label creation information contact Watts Water Technologies Marketing Communications Group.⑦ ⑩
- The artwork on this ATI is for reference only and is not to be used as acceptance criteria for inspection.
- Dimensions shown in inches (millimeters shown in brackets [ ]).
- This artwork will vary with each carton based on the cartons size and configuration. The following pages provide an outline for the creation of the artwork, however some items shown may need to be omitted or resized. Final artwork approval for all cartons is at the discretion of Watts Water Technologies Marketing Communications Group. ⑩
- For engineering reference only, ATI artwork saved as "*5003384_ARTWORK*" in the "*ACTIVE ATI*" directory.

ASSEMBLY AND TEST INSTRUCTION

SERIES:	ALL WATTS WATER TECHNOLOGIES DOMESTIC MASTER CARTONS	ATI No.	M.75.A1	REV.: 10
SIZE(S):	N/A	EDP NO.	5003384	PAGE: 2 OF 7
MODELS:	N/A	SUPERSEDES:	REV. 6 OF 06-10-2004	

COLOR SPECIFICATIONS

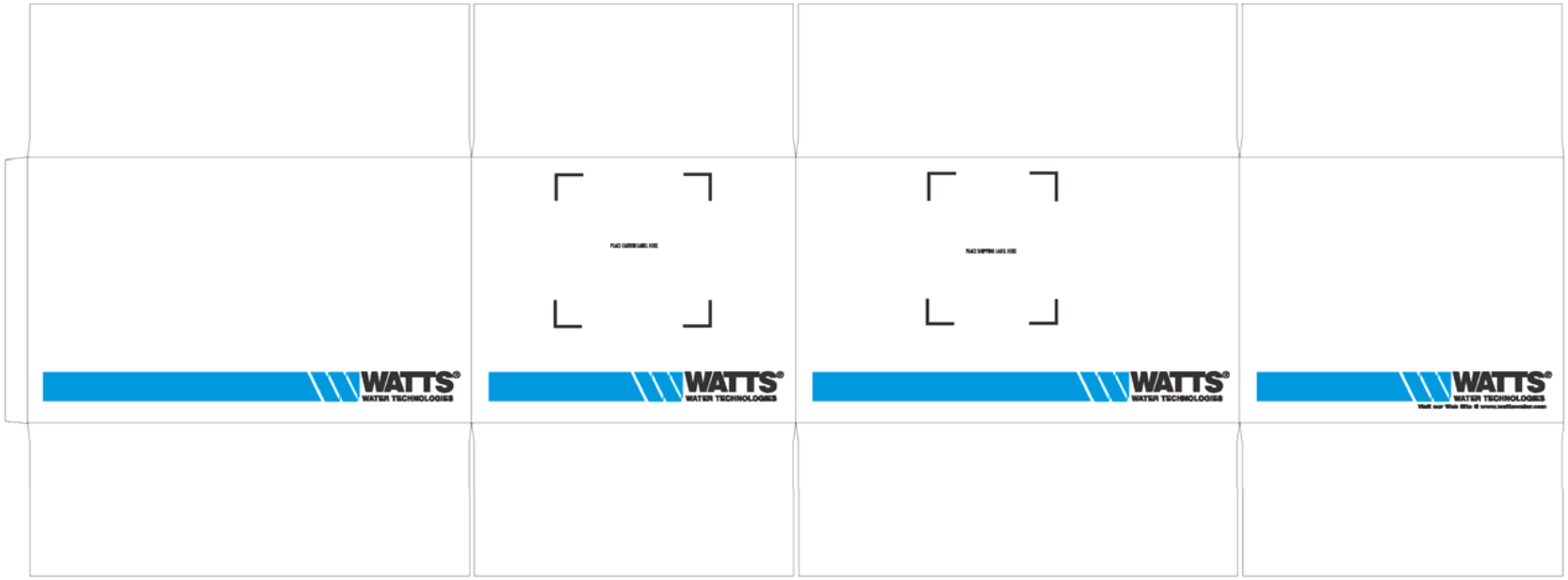

COLORS:
ALL BLUE BARS AND W'S TO BE PRINTED IN PROCESS BLUE INK WHEN PRINTING DIRECTLY ON BROWN CORRUGATED AS SHOWN ON THIS PAGE (PMS 300 BLUE INK MUST BE USED IF PRINTING ON A WHITE BACKGROUND I.E.; WHITE CLAY COATED MATERIAL). ALL OTHER PRINTING (TEXT OR GRAPHIC) TO BE PROCESS BLACK AS SHOWN ON THIS PAGE.

WATTS WATER TECHNOLOGIES EDP NUMBER, DESCRIPTION AND CARTON SUPPLIERS CERTIFICATION TO BE STAMPED ON BOTTOM PANEL THAT WILL BE EXPOSED AFTER CARTON IS CLOSED. ⑩

ASSEMBLY AND TEST INSTRUCTION

SERIES:	ALL WATTS WATER TECHNOLOGIES DOMESTIC MASTER CARTONS	ATI No.	M.75.A1	REV.: 10
SIZE(S):	N/A	EDP NO.	5003384	PAGE: 3 OF 7
MODELS:	N/A	SUPERSEDES:	REV. 6 OF 06-10-2004	

LAYOUT SPECIFICATIONS

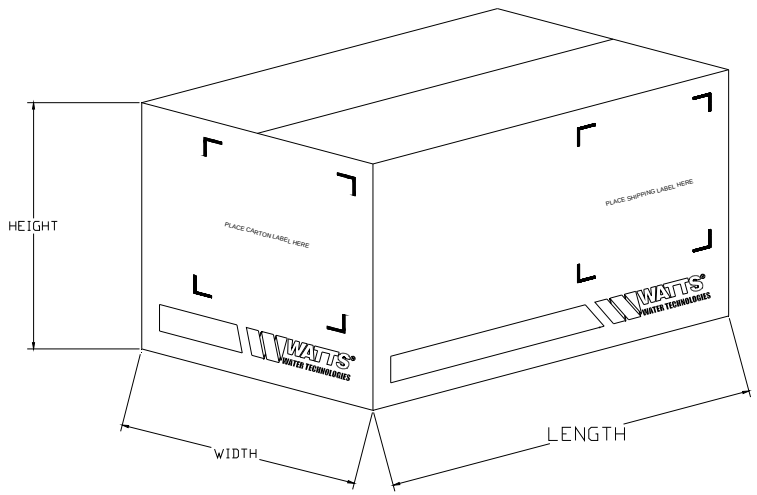

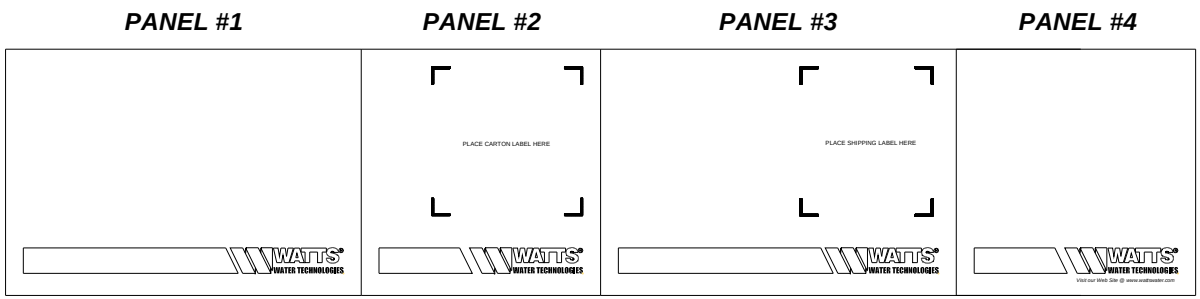

ASSEMBLY AND TEST INSTRUCTION

SERIES:	ALL WATTS WATER TECHNOLOGIES DOMESTIC MASTER CARTONS	ATI No.	M.75.A1	REV.: 10
SIZE(S):	N/A	EDP NO.	5003384	PAGE: 4 OF 7
MODELS:	N/A	SUPERSEDES:	REV. 6 OF 06-10-2004	

o **LAYOUT SPECIFICATIONS CONTINUED, ARTWORK DIMENSIONS PANEL #1 & 2:**

"**PLACE CARTON LABEL HERE**" AND 1/16" [1.59] THICK LINES TO BE PRINTED AS SHOWN ON PANEL #2. LOCATION TO BE USED FOR WATTS WATER TECHNOLOGIES MASTER CARTON LABEL ONLY

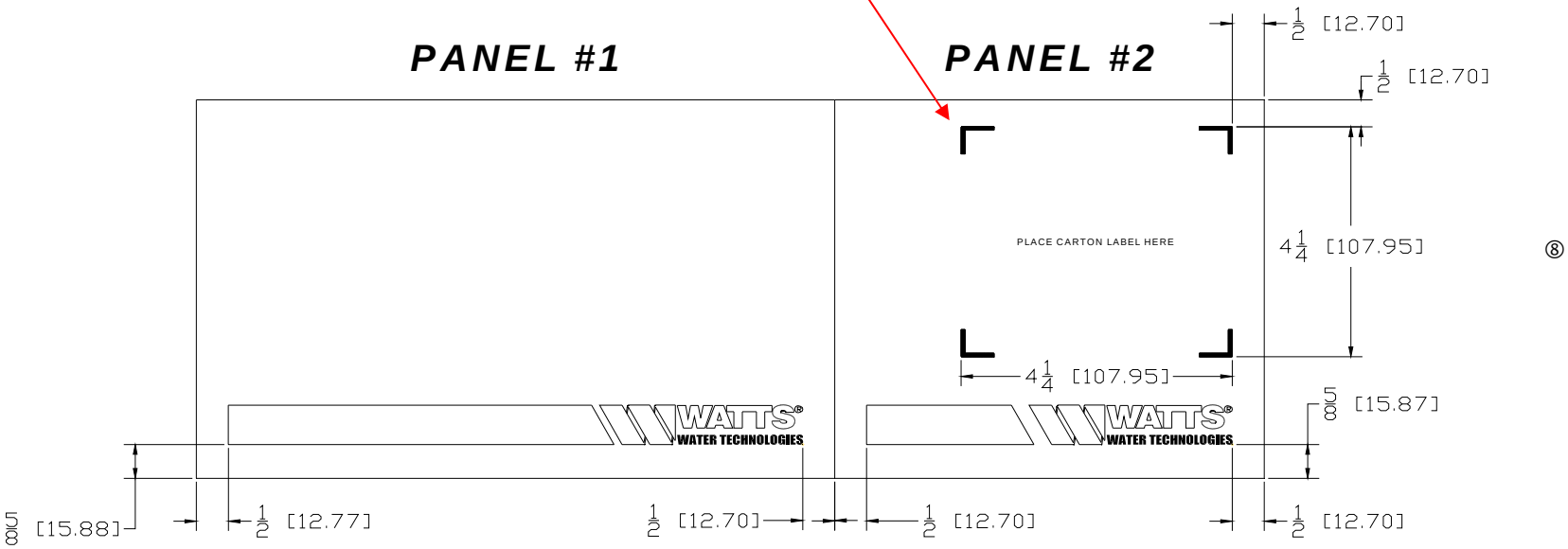

⑧

WATTS WATER TECHNOLOGIES LOGO AND BLUE BAR TO BE PRINTED AS SHOWN. ⑩

ASSEMBLY AND TEST INSTRUCTION

SERIES:	ALL WATTS WATER TECHNOLOGIES DOMESTIC MASTER CARTONS	ATI No.	M.75.A1	REV.: 10
SIZE(S):	N/A	EDP NO.	5003384	PAGE: 5 OF 7
MODELS:	N/A	SUPERSEDES:	REV. 6 OF 06-10-2004	

o **LAYOUT SPECIFICATIONS CONTINUED, ARTWORK DIMENSIONS PANEL #3 & 4**

"**PLACE SHIPPING LABEL HERE**" AND 1/16" [1.59] THICK LINES TO BE PRINTED AS SHOWN ON PANEL #3. LOCATION TO BE USED FOR WATTS WATER TECHNOLOGIES SHIPPING LABEL ONLY**, NOT FOR SUPPLIER USE.** ⑩

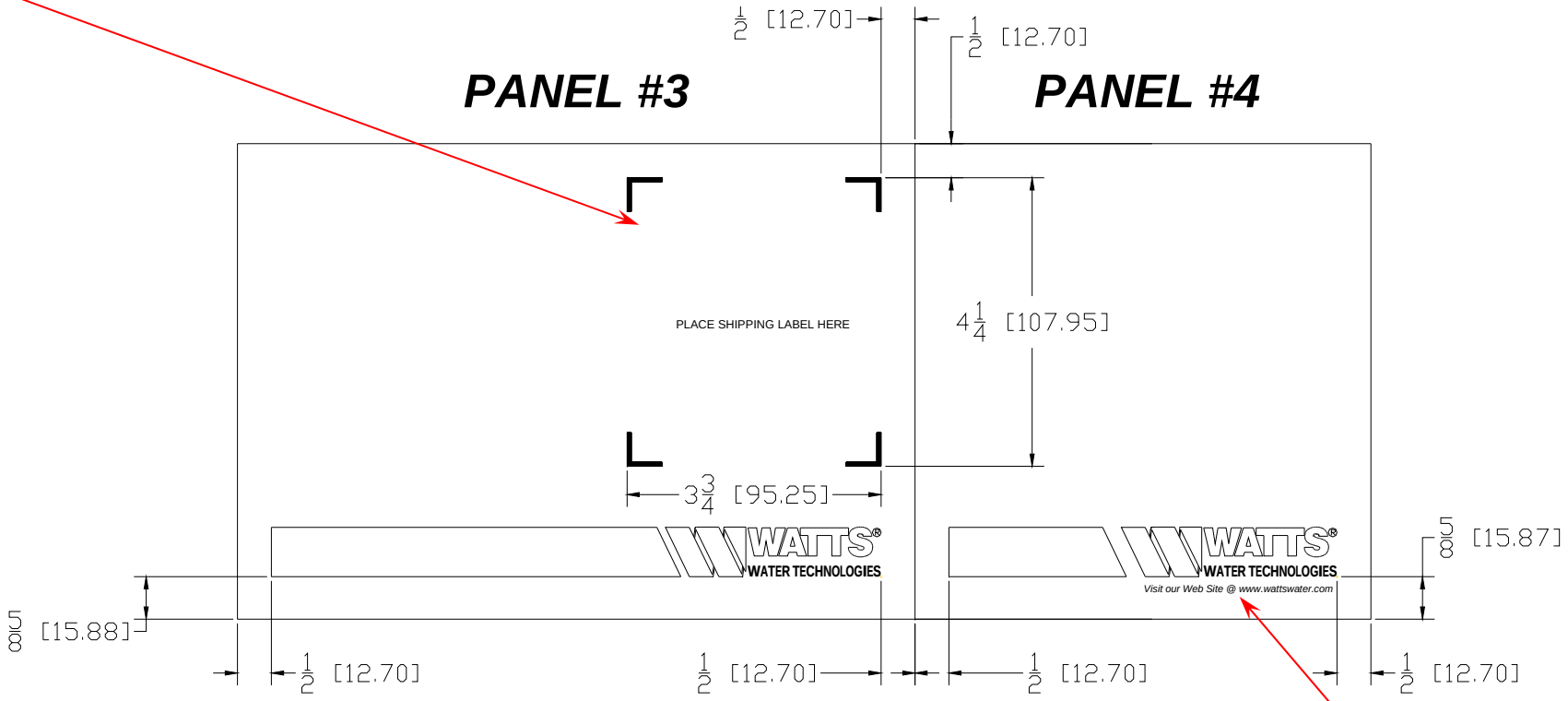

WATTS WATER TECHNOLOGIES LOGO AND BLUE BAR TO BE PRINTED AS SHOWN. ⑩

"**Visit our Web Site @ www.wattswater.com**" TO BE PRINTED APPROXIMATELY 1/8" [3.2] BELOW WATTS WATER TECHNOLOGIES LOGO ON PANEL #4 AS SHOWN. SIZE PROPORTIONAL TO LOGO AS SHOWN. ⑩

ASSEMBLY AND TEST INSTRUCTION

SERIES:	ALL WATTS WATER TECHNOLOGIES DOMESTIC MASTER CARTONS	ATI No.	M.75.A1	REV.: 10
SIZE(S):	N/A	EDP NO.	5003384	PAGE: 6 OF 7
MODELS:	N/A	SUPERSEDES:	REV. 6 OF 06-10-2004	

LAYOUT SPECIFICATIONS CONTINUED, WATTS WATER TECHNOLOGIES LOGO

RECTANGULAR BOX

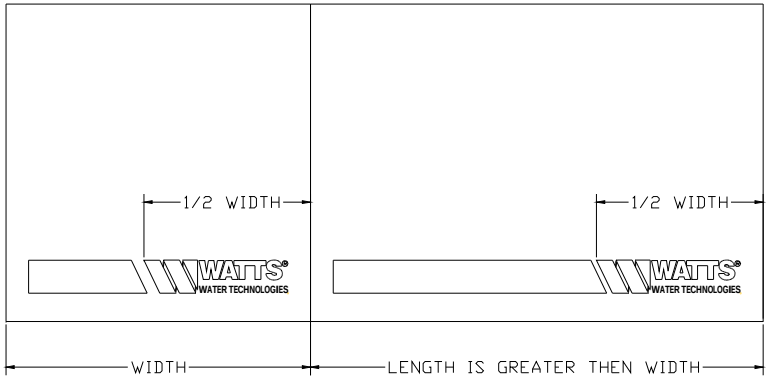

SQUARE BOX

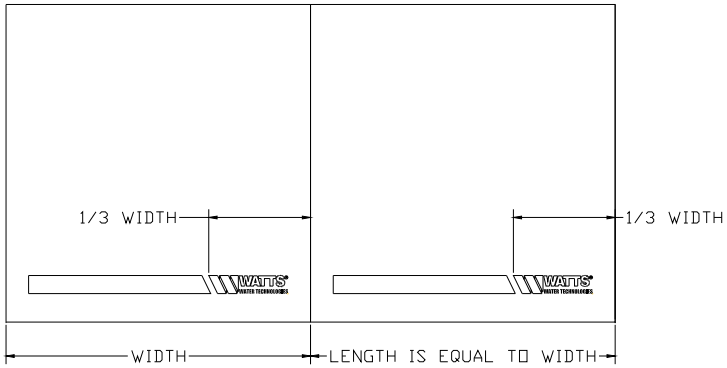

ASSEMBLY AND TEST INSTRUCTION

SERIES:	ALL WATTS WATER TECHNOLOGIES DOMESTIC MASTER CARTONS	ATI No.	M.75.A1	REV.: 10
SIZE(S):	N/A	EDP NO.	5003384	PAGE: 7 OF 7
MODELS:	N/A	SUPERSEDES:	REV. 6 OF 06-10-2004	

CUT CASE (UNPERFORATED) OPTION:

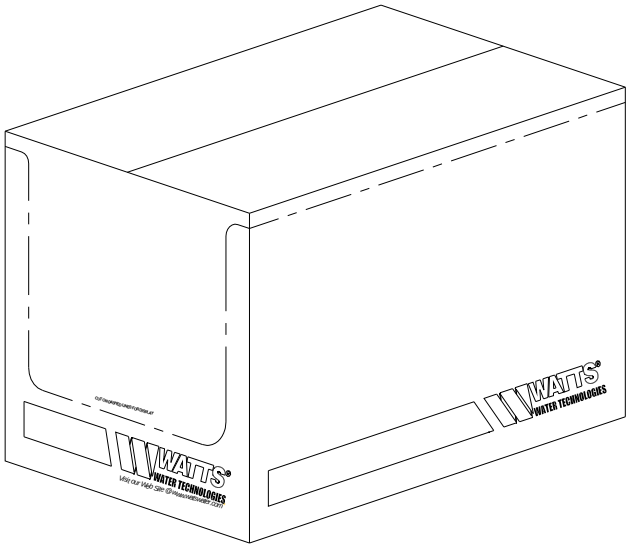

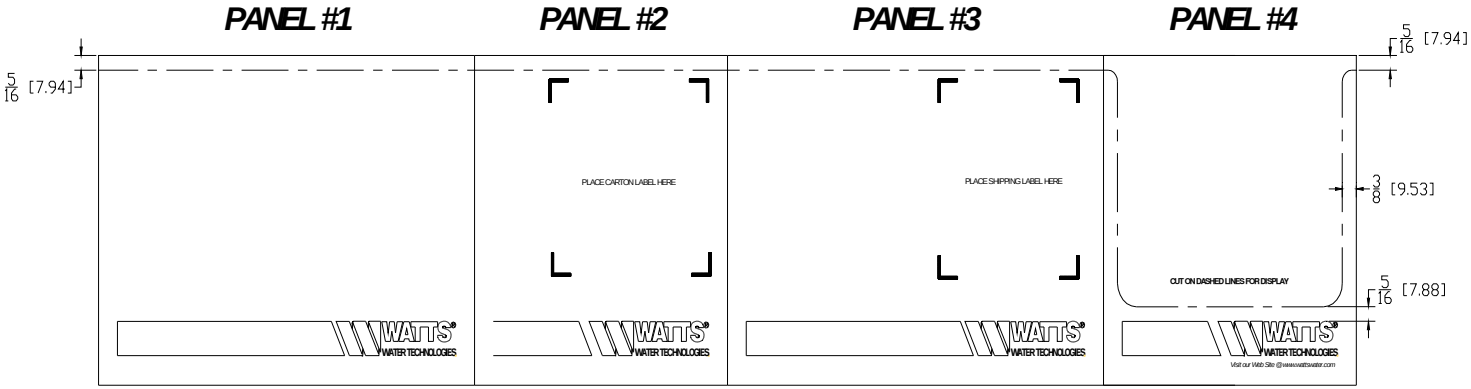

SAME AS STANDARD CARTON EXCEPT DASHED CUT LINE AND TEXT **"CUT ON DASHED LINES FOR DISPLAY"** TO BE PRINTED IN BLACK AS SHOWN.