For Non-Health Hazard Applications

Job Name _____ Contractor _____

Job Location _____ Approval _____

Engineer _____ Contractor's P.O. No. _____

Approval _____ Representative _____

Showerhead

Part No. 141-816

Specifications

Description	Adjustable Showerhead, Male Thread
Material	Brass
Finish	Polished Chrome
Agency/Spec Approval	ANSI A112.18.1M CSA B125
Maximum Flow	2.5 gpm @ 80 psi (9.5 l/min @550 kPa)
Shipping Weight	1.0 lb (0.5 kg)

Dimensions

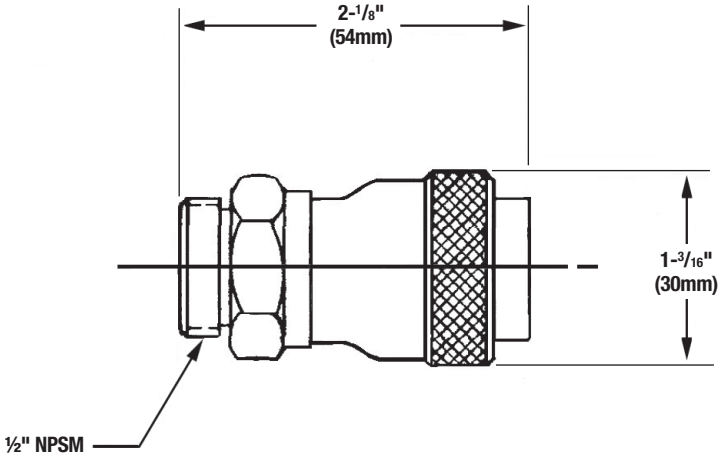

Powers product specifications in U.S. customary units and metric are approximate and are provided for reference only. For precise measurements, please contact Powers Technical Service. Powers reserves the right to change or modify product design, construction, specifications, or materials without prior notice and without incurring any obligation to make such changes and modifications on Powers products previously or subsequently sold.

POWERS™

A WATTS Brand

USA: Tel: (800) 669-5430 • Fax: (847) 229-0526 • PowersControls.com
Canada: Tel: (905) 332-4090 • Fax: (905) 332-7068 • PowersControls.ca
Latin America: Tel: (52) 81-1001-8600 • PowersControls.com

© 2017 Powers