For Non-Health Hazard Applications

Job Name _____ Contractor _____

Job Location _____ Approval _____

Engineer _____ Contractor's P.O. No. _____

Approval _____ Representative _____

Hand Shower

Part No. 141-919 & 141-163

Specifications

Description	Deluxe Hand Shower with Glide Rail
Finish	See drawing
Agency/Spec Approval	ANSI A112.18.1M CSA B125
Maximum Flow	2.5 gpm @ 80 psi (9.5 l/min @550 kPa)
Shipping Weight	141-163 – 3.1 lb. (1.14 kg.) 141-919 – 3.5 lb. (1.56 kg.)

Dimensions

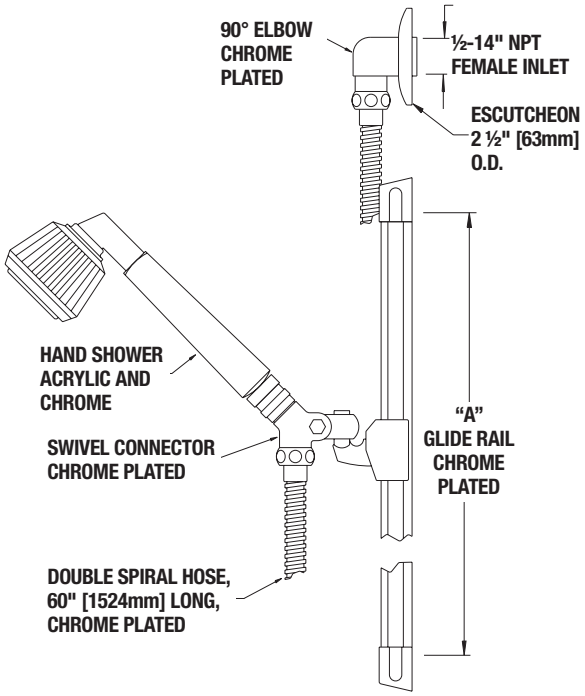

Indicate Desired Fitting

3	Part Number	Type	A
☐	141-163	6	23-1/8" (587mm), 24" Glide Rail
☐	141-919	3	29-1/8" (740), 30" Glide Rail

Powers product specifications in U.S. customary units and metric are approximate and are provided for reference only. For precise measurements, please contact Powers Technical Service. Powers reserves the right to change or modify product design, construction, specifications, or materials without prior notice and without incurring any obligation to make such changes and modifications on Powers products previously or subsequently sold.

POWERS™

A WATTS Brand

USA: Tel: (800) 669-5430 • Fax: (847) 229-0526 • PowersControls.com
Canada: Tel: (905) 332-4090 • Fax: (905) 332-7068 • PowersControls.ca
Latin America: Tel: (52) 81-1001-8600 • PowersControls.com

© 2017 Powers