# FD-1100-C

Tag: _____

## Floor Drain with Round Stainless Steel Strainer

**Components:**

B3

BLT3-XYC

STD-3

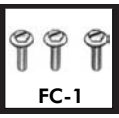
FC-1

**SPECIFICATION:** Watts Drainage Products FD-1100-C epoxy coated cast iron floor drain with membrane clamp, primary and secondary weepholes, and adjustable round Type 304 cast stainless steel strainer.

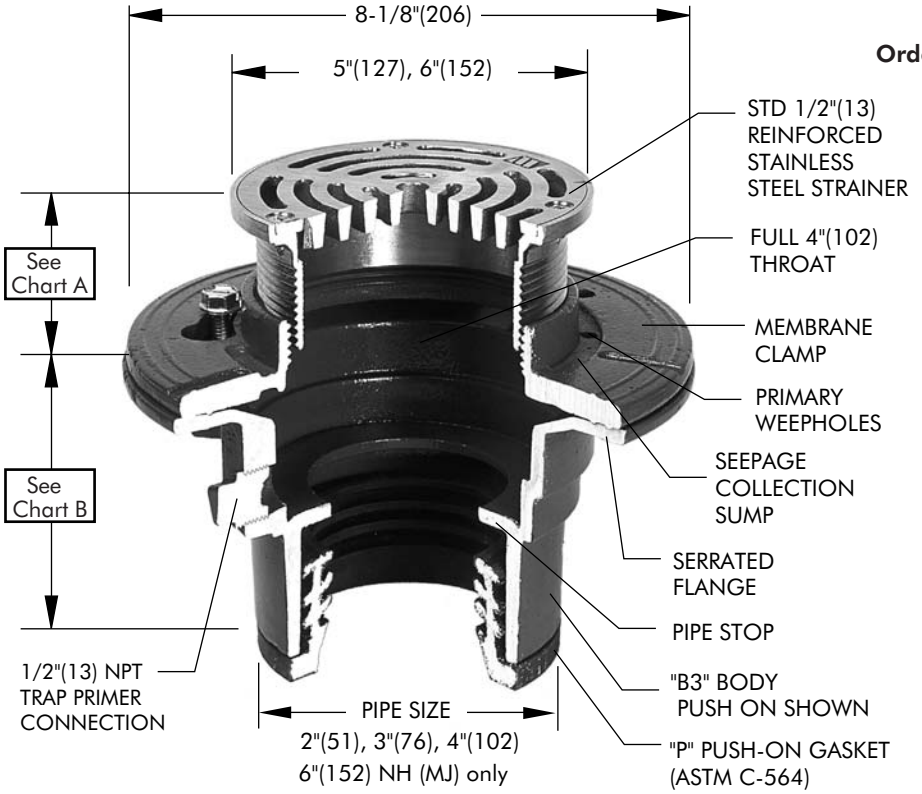


**Order Code: FD-110☐☐-C-☐-☐-☐-☐**

**Ex. FD-1102P-C-5-3**

| Pipe Sizing (Select One) | | |
|---|---|---|
| Suffix | Description | |
| 2 | 2"(51) Pipe Size | ☐ |
| 3 | 3"(76) Pipe Size | ☐ |
| 4 | 4"(102) Pipe Size | ☐ |
| 6 | 6"(152) Pipe Size | ☐ |

| Outlet Type (Select One) | | |
|---|---|---|
| Suffix | Description | |
| NH | No Hub (MJ) | ☐ |
| P | Push On | ☐ |
| T | Threaded Outlet | ☐ |
| X | Inside Caulk | ☐ |

| Strainer (Select One) | | |
|---|---|---|
| Suffix | Description | |
| 5-3 | 5"(127) Diameter, Stainless Steel | ☐ |
| 6-3 | 6"(152) Diameter, Stainless Steel | ☐ |

| Options (Select One or More) | | |
|---|---|---|
| Suffix | Description | |
| -5 | Sediment Bucket | ☐ |
| -6 | Vandal Proof | ☐ |
| -8 | Backwater Valve (3"/4" Only) | ☐ |
| -10 | Secured Top c/w Phillips Screws | ☐ |
| -13 | Galvanized Body | ☐ |
| -15 | Strainer Extension (DD-50) | ☐ |
| -28 | All Stainless Steel | ☐ |
| -113M | Special Epoxy from 3M Range | ☐ |
| -SO | Side Outlet | ☐ |

| Optional Body Material (NH Only) | | |
|---|---|---|
| Suffix | Description | |
| -60 | PVC Body w/Socket Outlet | ☐ |
| -61 | ABS Body w/Socket Outlet | ☐ |

**Chart A**

| Str. Dia. | Min. | Max. | Load Rating | Free Area Sq. In. |
|---|---|---|---|---|
| 5"(127) | 13/16"(21) | 2-1/2"(64) | *XHD | 6 |
| 6"(152) | 7/8"(22) | 2-3/4"(70) | *XHD | 7 |

* The load classifications are in accordance with the American National Standards ASME A112.21.1M ASME Ratings are as follows:
XHD - Safe Live Load 7500-10000 lbs.(3375-4500kg)
The above categories are given as a guide only. Please consult factory.

**Chart B**

| | Std. | P | T | X | 60/61 |
|---|---|---|---|---|---|
| Pipe Size | No Hub | Push On | Female Thread | Inside Caulk | PVC/ ABS |
| 2"(51) | 3-5/8"(92) | 4-1/4"(108) | 4-1/4"(108) | 4-1/2"(114) | 3-3/4"(95) |
| 3"(76) | 3-5/8"(92) | 4-1/4"(108) | 4-1/4"(108) | 4-1/2"(114) | 3-3/4"(95) |
| 4"(102) | 3-5/8"(92) | 4-1/4"(108) | 4-1/4"(108) | 4-1/2"(114) | 4"(102) |
| 6"(152) | 3-1/2"(89) | | | | |

Job Name _____ Contractor _____

Job Location _____ Contractor's P.O. No. _____

Engineer _____ Representative _____

WATTS Drainage reserves the right to modify or change product design or construction without prior notice and without incurring any obligation to make similar changes and modifications to products previously or subsequently sold. See your WATTS Drainage representative for any clarification. Dimensions are subject to manufacturing tolerances.

CANADA: 5435 North Service Road, Burlington, ON, L7L 5H7 TEL: 905-332-6718 TOLL-FREE: 1-888-208-8927 Website: www.wattsdrainage.ca

© Watts Drainage 2004