FD-360

Tag: _____

Area Drain with 15" Round Adjustable Top

Components:

B2

FD-360

SPECIFICATION: Watts Drainage Products FD-360 epoxy coated cast iron area drain with anchor flange, weepholes, 15"(381) diameter adjustable top with ductile iron (standard) tractor grate, no hub (MJ) (standard) outlet.

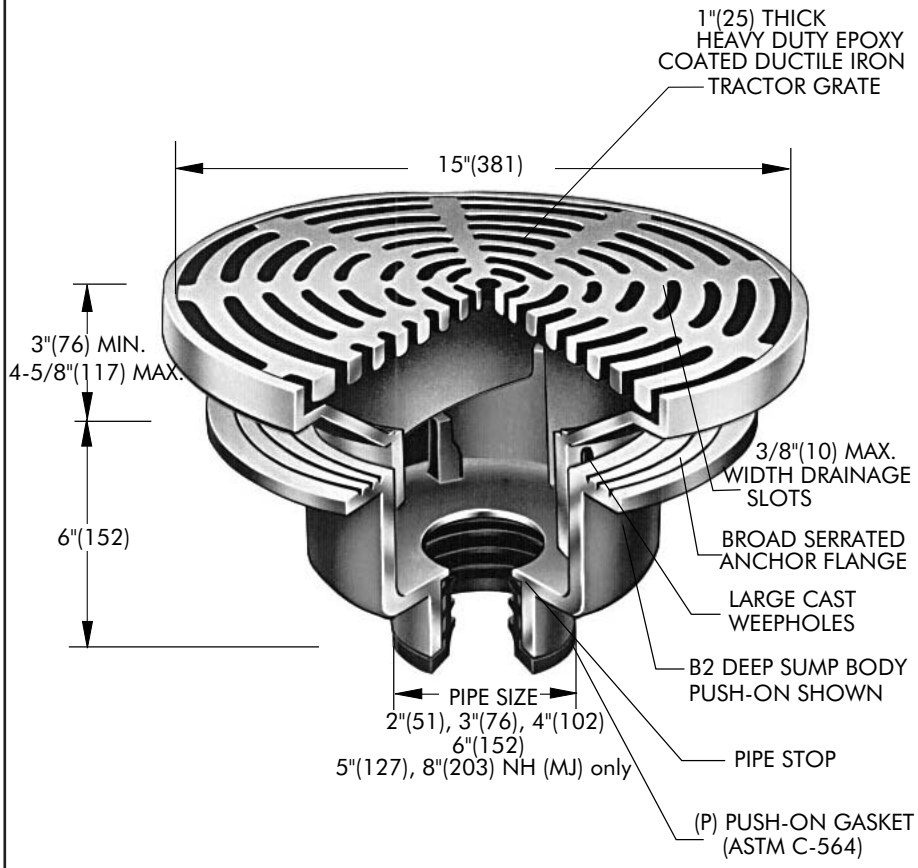

Order Code: FD-36□□-□-□

Ex. FD-362P-1

Pipe Sizing (Select One)		
Suffix	**Description**	
2	2"(51) Pipe Size	☐
3	3"(76) Pipe Size	☐
4	4"(102) Pipe Size	☐
5	5"(127) Pipe Size	☐
6	6"(152) Pipe Size	☐
8	8"(203) Pipe Size	☐

Outlet Type (Select One)		
Suffix	**Description**	
NH	No Hub (MJ)	☐
P	Push On	☐
T	Threaded Outlet	☐
X	Inside Caulk	☐

Grate (Select One)		
Suffix	**Description**	
-1	15"(381) Nickel Bronze	☐
-4	15"(381) Ductile Iron	☐

Options (Select One or More)		
Suffix	**Description**	
-5	Sediment Bucket	☐
-6	Vandal Proof	☐
-8	Backwater Valve (3" / 4" Only)	☐
-10	Secured Top c/w Phillips screws	☐
-12	Galvanized Top	☐
-13	All Galvanized	☐
-15	Adj. Extension (4"- 5-5/8")	☐
-113M	Special Epoxy from 3M Range	☐
-F4-50	4" Round Cast Iron Funnel	☐
-F4-1	4" Round Nickel Bronze Funnel	☐
-F6-1	6" Round Nickel Bronze Funnel	☐
-G-50	4x9" Oval Cast Iron Funnel	☐
-G-1	4x9" Oval Nickel Bronze Funnel	☐
-Z	Elastomeric Flange	☐

Load Rating & Free Area

Suffix	Load Rating	Free Area Sq. In.
-1	*XHD	61
-4	*XHD	61

* The load classifications are in accordance with the American National Standards ASME A112.21.1M
ASME Ratings are as follows:
XHD - Safe Live Load 7500-10000 lbs.(3375-4500kg)
The above categories are given as a guide only.
Please consult factory.

Job Name _____ Contractor _____

Job Location _____ Contractor's P.O. No. _____

Engineer _____ Representative _____

WATTS Drainage reserves the right to modify or change product design or construction without prior notice and without incurring any obligation to make similar changes and modifications to products previously or subsequently sold. See your WATTS Drainage representative for any clarification. Dimensions are subject to manufacturing tolerances.

CANADA: 5435 North Service Road, Burlington, ON, L7L 5H7 TEL: 905-332-6718 TOLL-FREE: 1-888-208-8927 Website: www.wattsdrainage.ca

© Watts Drainage 2004