For Commercial Applications

Job Name _____ Contractor _____

Job Location _____ Approval _____

Engineer _____ Contractor's P.O. No. _____

Approval _____ Representative _____

Tag _____

RD-800

Dual Outlet Large Capacity Roof Drain/Overflow

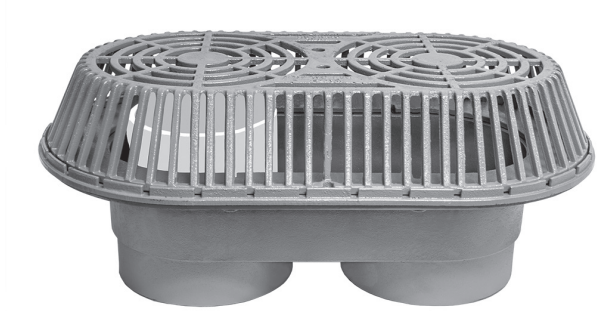

Specification

Watts RD-800 epoxy coated cast iron dual outlet roof drain/overflow combination with flashing clamp, integral gravel stop, 4"(102) high internal overflow standpipe, secured ductile iron dome, and no hub outlets.

Pipe Size (Select One)		
Suffix	Description	
8	8"(203) Pipe Size	☐
10	10"(254) Pipe Size	☐

Options (Select One or More)		
Suffix	Description	
-D	Underdeck Clamp	☐
-F	Deck Flange/Adj. Extension	☐
-GSS	Stainless Steel Ballast Guard	☐
-L	Vandal Proof Dome	☐
-W2	2" High Overflow	☐

Deck Opening:
29 1/2"(749) x 15 3/4"(400)
with Deck Flange:
35"(889) x 22"(559)

Free Area Sq. In.
304

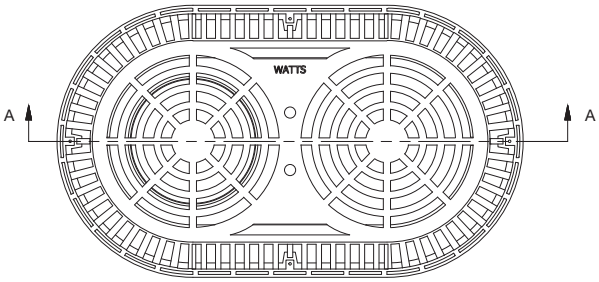

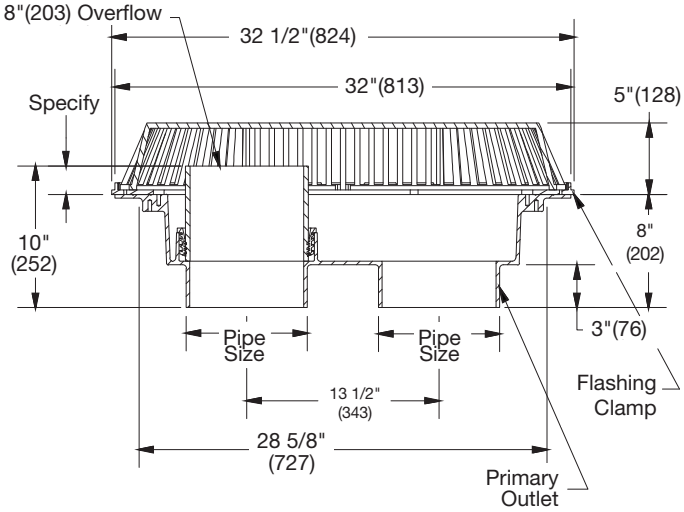

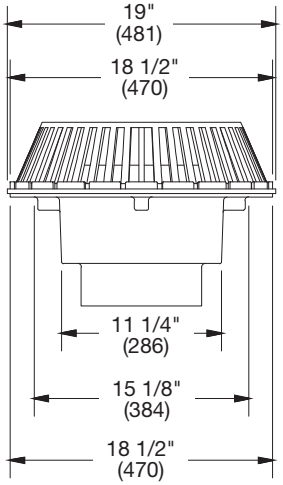

NOTICE

The information contained herein is not intended to replace the full product installation and safety information available or the experience of a trained product installer. You are required to thoroughly read all installation instructions and product safety information before beginning the installation of this product.

Watts product specifications in U.S. customary units and metric are approximate and are provided for reference only. For precise measurements, please contact Watts Technical Service. Watts reserves the right to change or modify product design, construction, specifications, or materials without prior notice and without incurring any obligation to make such changes and modifications on Watts products previously or subsequently sold.

USA: T: (800) 338-2581 • F: (828) 248-3929 • Watts.com
Canada: T: (905) 332-4090 • F: (905) 332-7068 • Watts.ca
Latin America: T: (52) 81-1001-8600 • Watts.com

© 2018 Watts